LIMA

HO SCALE SPARE PARTS

208065LG

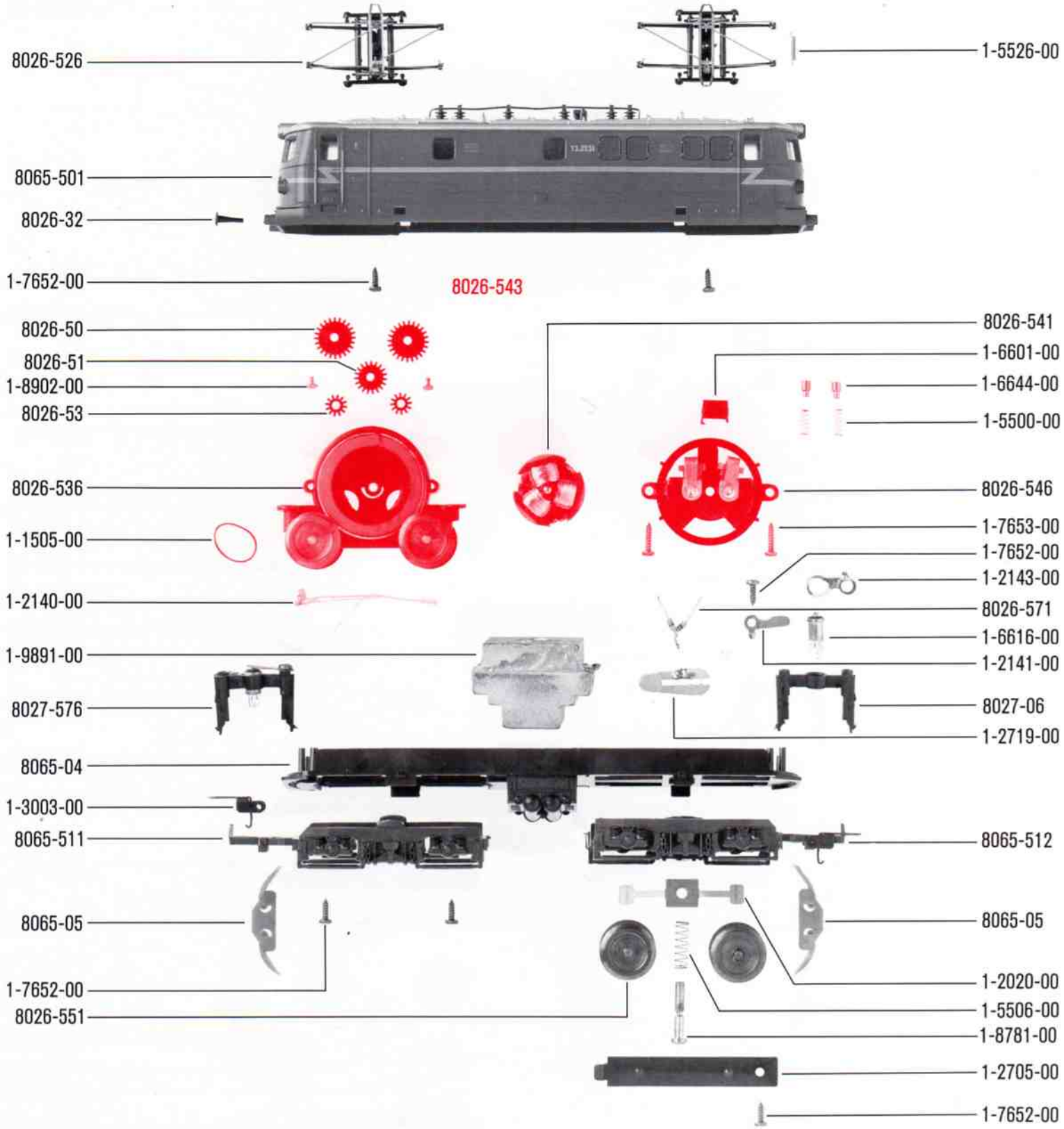

JUNE 1982

PRINTED IN ITALY